US 20160290699A1

(19) United States

(12) Patent Application Publication

(10) Pub. No.: US 2016/0290699 A1

(43) Pub. Date: Oct. 6, 2016

Dodson

(54) SNOWMAKING AUTOMATION SYSTEM AND MODULES

(71) Applicant: **Snow Logic, Inc.**, Park City, UT (US)

(72) Inventor: **Mitchell Joe Dodson**, Park City, UT (US)

(73) Assignee: **Snow Logic, Inc.**, Park City, UT (US)

(21) Appl. No.: **15/092,574**

(22) Filed: **Apr. 6, 2016**

Related U.S. Application Data

(60) Provisional application No. 62/143,776, filed on Apr. 6, 2015.

Publication Classification

(51) **Int. Cl.**
F25C 3/04 (2006.01)

(52) **U.S. Cl.**
CPC ***F25C 3/04*** (2013.01); *F25C 2303/0481* (2013.01); *F25C 2600/04* (2013.01)

(57) **ABSTRACT**

The invention is a snowmaking automation system and snowmaking automation modules for use with snowmaking guns and hydrants. Embodiments of the snowmaking automation modules described herein may be battery powered, and thus do not require fixed electrical infrastructure, but are designed to use such infrastructure if present on the mountain. In some embodiments, various components of the snowmaking automation system may be wireless and thus do not require hard-wired communications, for example between base stations, servers, databases, repeater nodes and remotely controlled snowmaking guns and hydrants with their snowmaking automation modules installed.

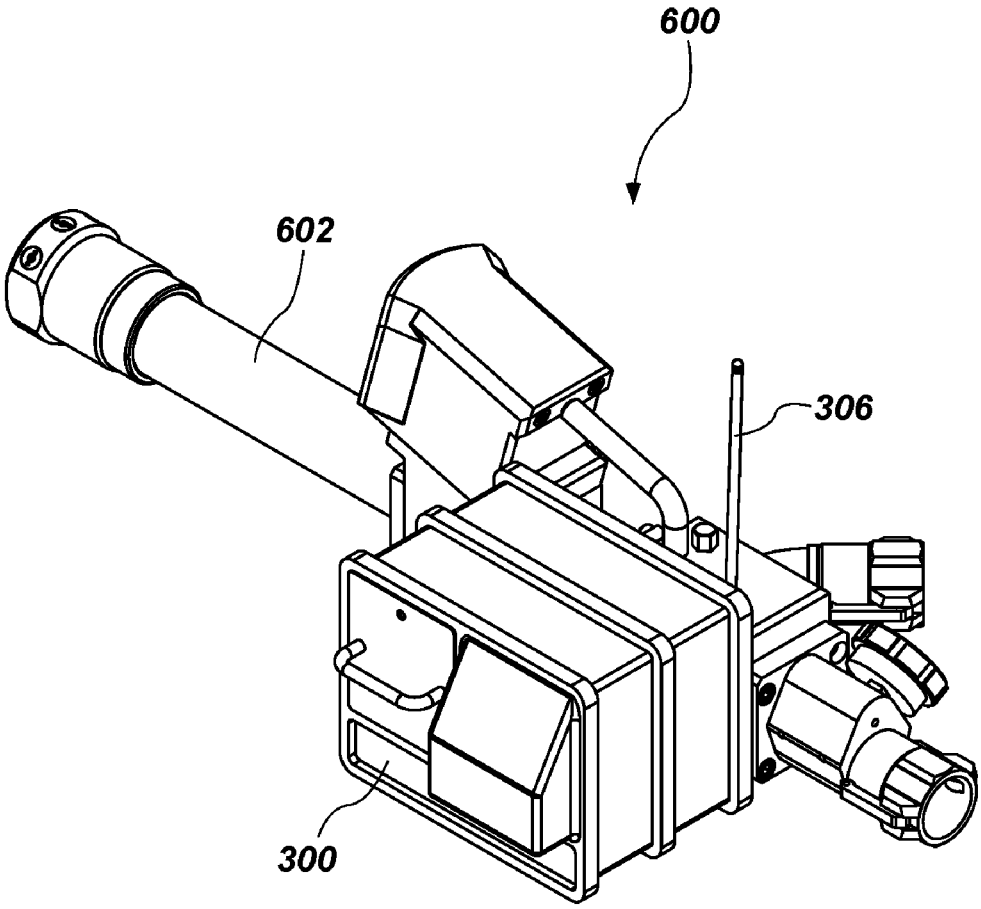

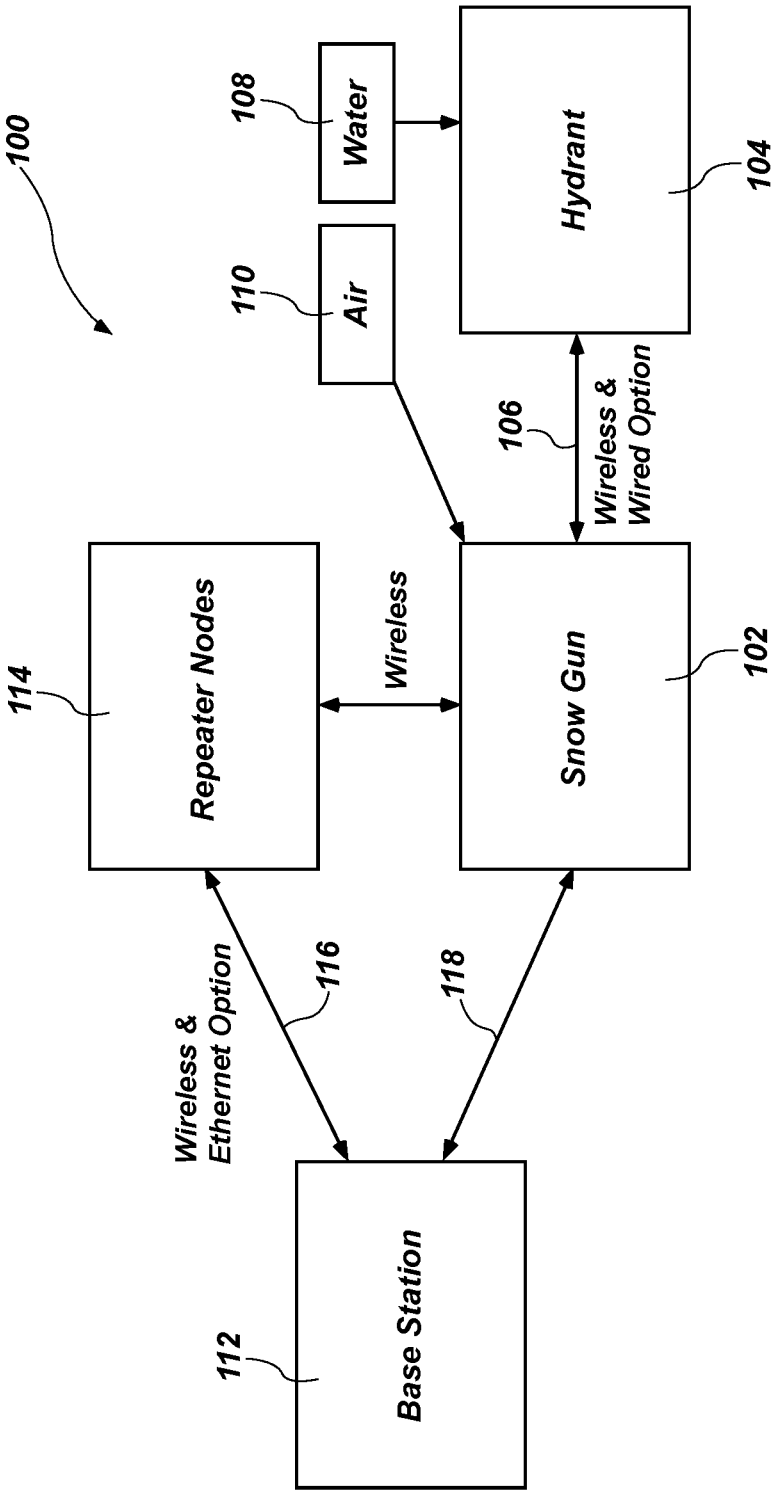
100
108
Water
110
Air
Hydrant
104
106
Wireless &
Wired Option
114
Repeater Nodes
Wireless
Snow Gun
102
Wireless &
Ethernet Option
116
118
112
Base Station

FIG. 1

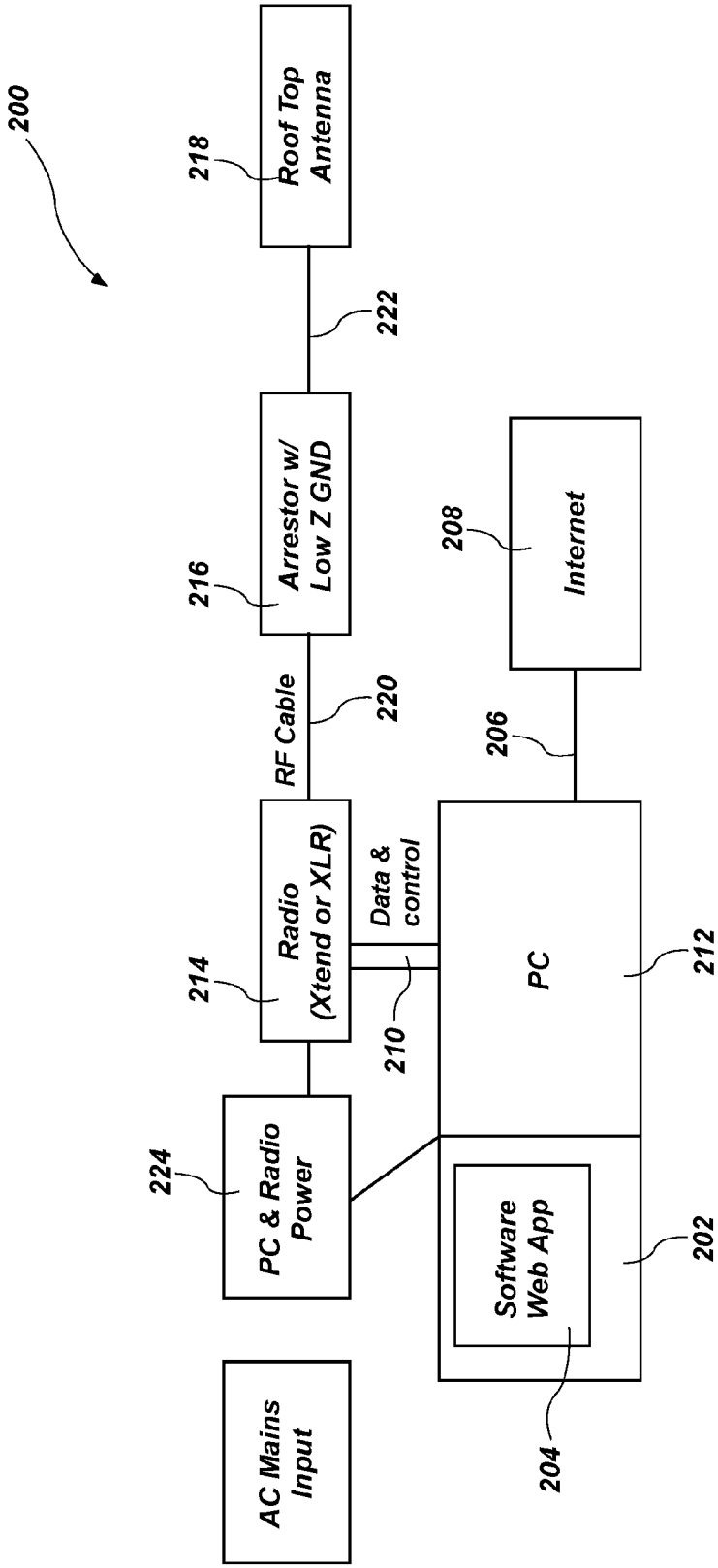
200
Roof Top Antenna
218
222
Arrestor w/ Low Z GND
216
RF Cable
220
Radio (Xtend or XLR)
214
Data & control
210
PC & Radio Power
224
AC Mains Input
Internet
208
206
PC
212
Software Web App
202
204

FIG. 2

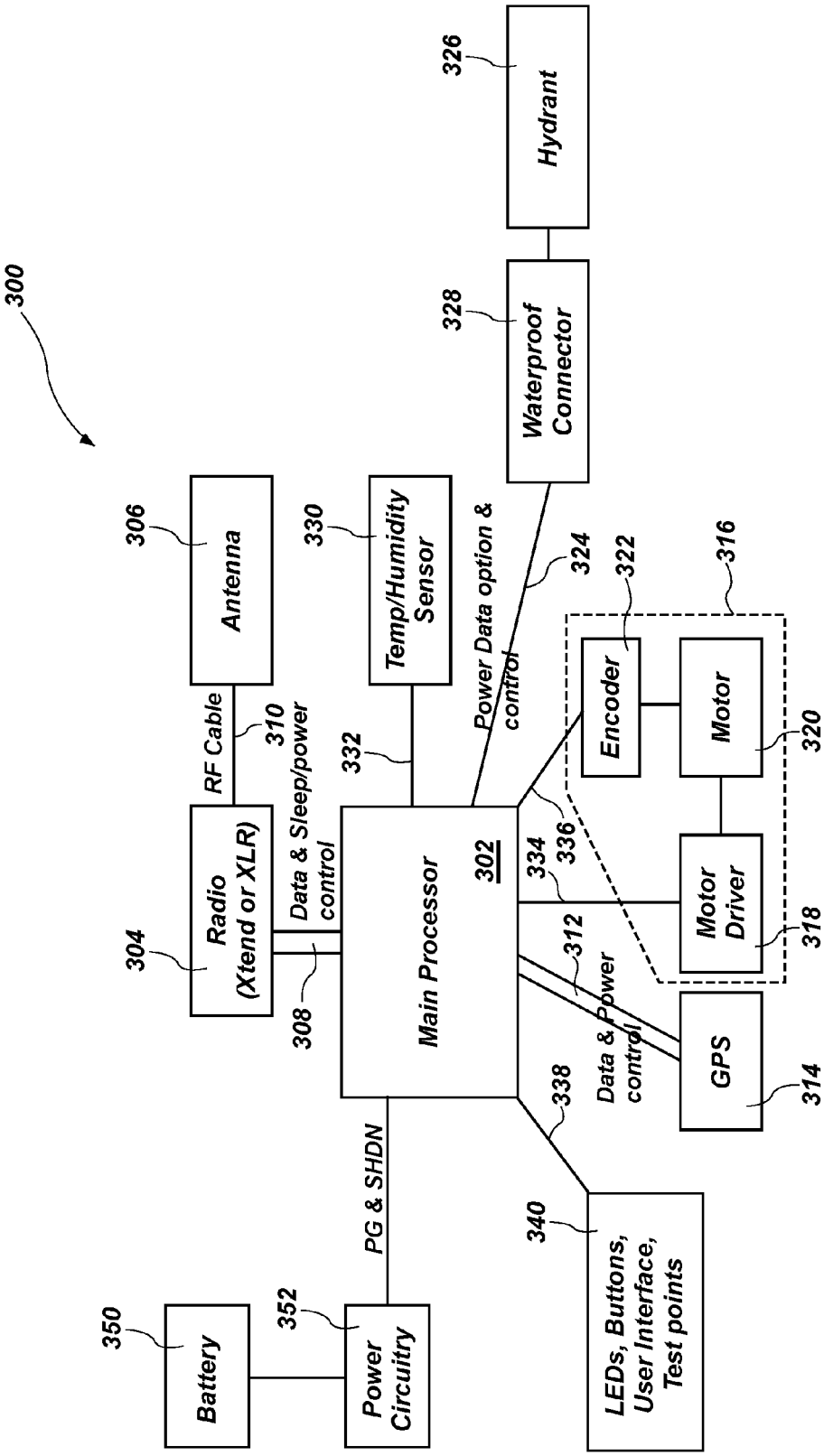
300
Hydrant
326
Waterproof Connector
328
Antenna
306
Temp/Humidity Sensor
330
Power Data option & control
324
Encoder
322
Motor
320
316
RF Cable
310
Data & Sleep/power control
332
Radio (Xtend or XLR)
304
308
Main Processor
302
334
336
Motor Driver
318
312
Data & Power control
GPS
314
338
PG & SHDN
340
LEDs, Buttons, User Interface, Test points
Battery
350
352
Power Circuitry

FIG. 3

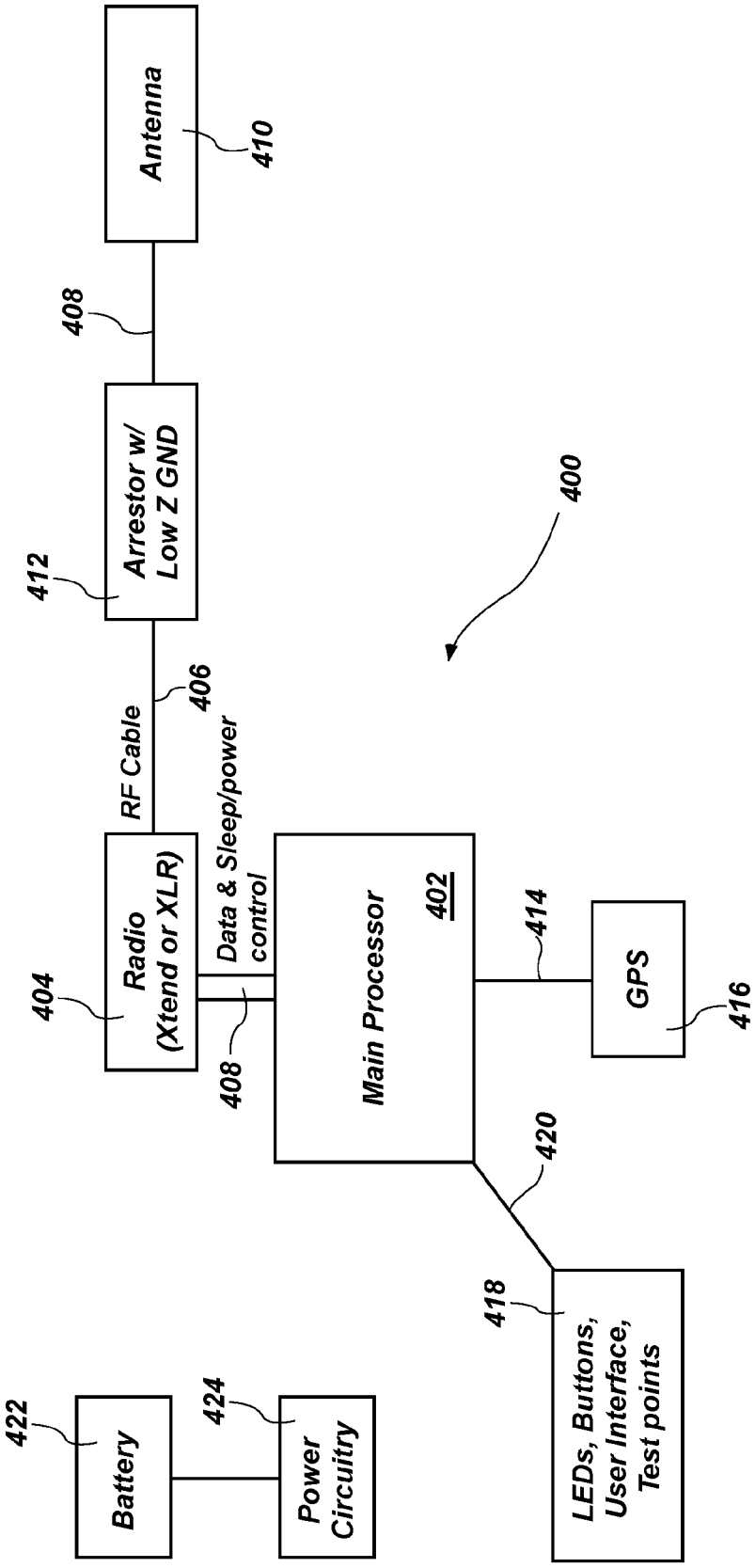
Antenna
410
408
Arrestor w/
Low Z GND
412
400
RF Cable
406
Data & Sleep/power
control
Radio
(Xtend or XLR)
404
408
Main Processor
402
414
GPS
416
420
418
LEDs, Buttons,
User Interface,
Test points
422
Battery
424
Power
Circuitry

FIG. 4

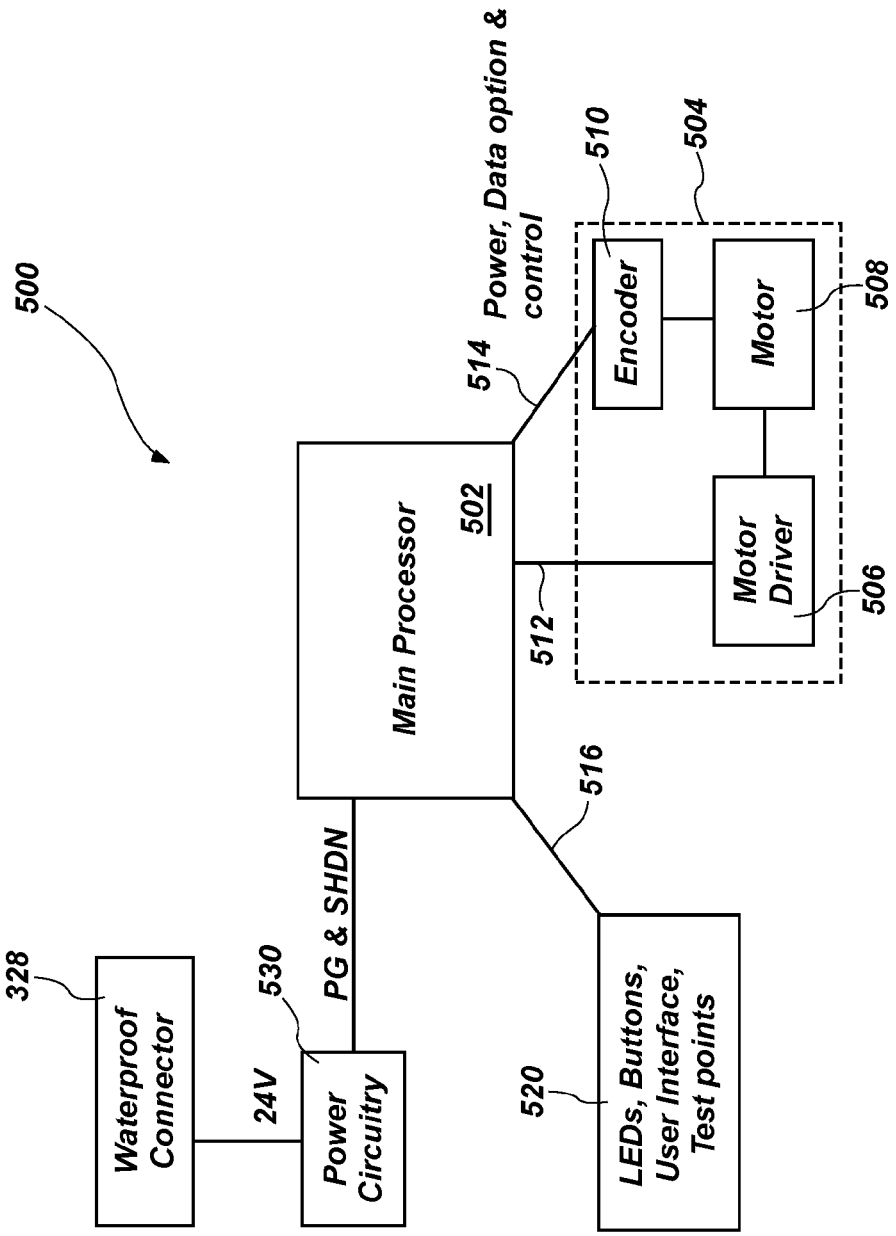
500
Main Processor
502
Power, Data option & control
514
512
516
Encoder
510
Motor
508
Motor Driver
506
504
PG & SHDN
Waterproof Connector
328
24V
Power Circuitry
530
LEDs, Buttons, User Interface, Test points
520

FIG. 5

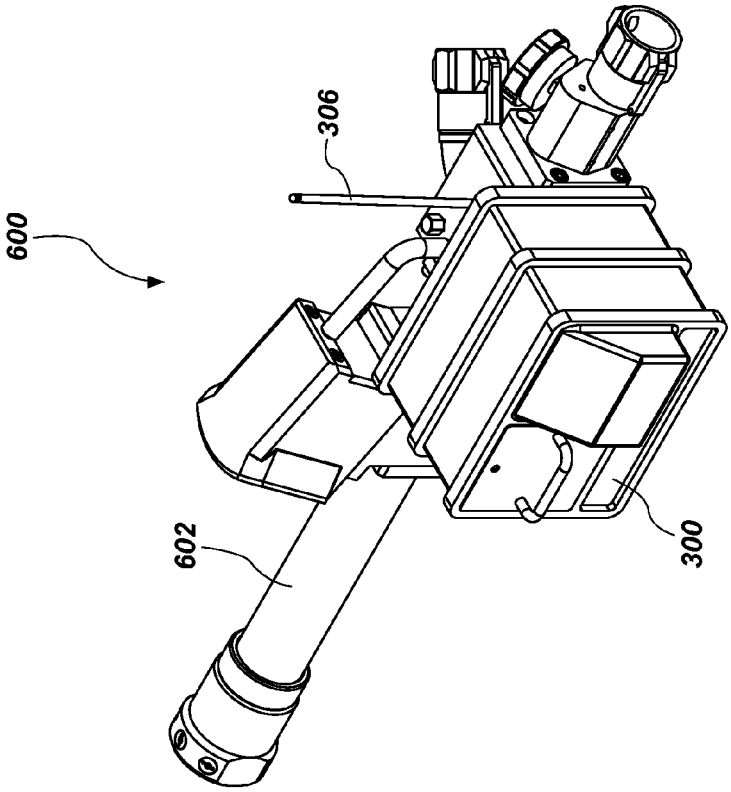

FIG. 6A

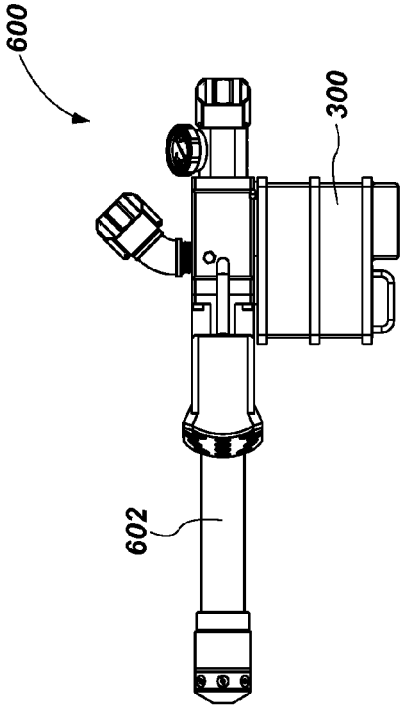

FIG. 6C

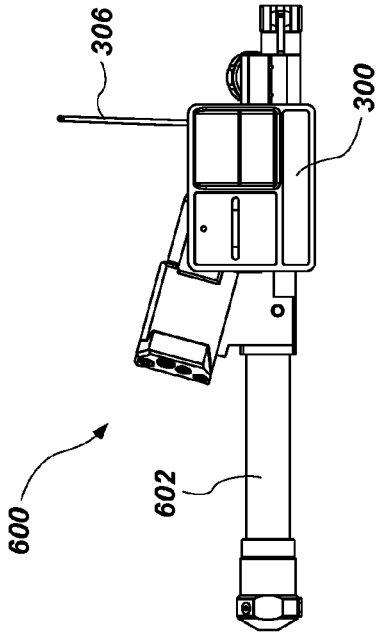

FIG. 6B

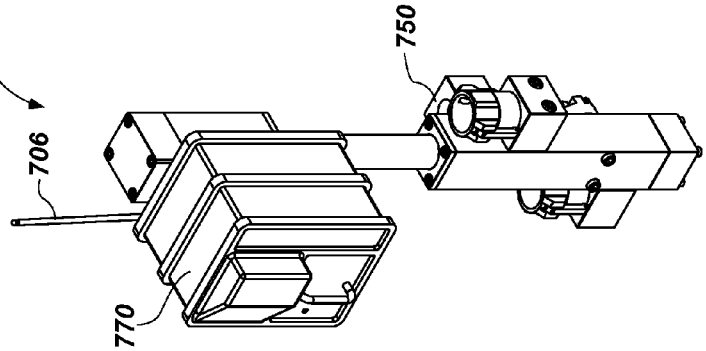

FIG. 7A

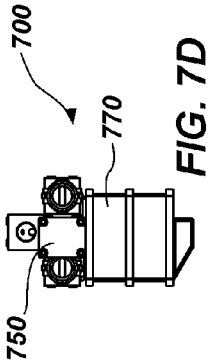

FIG. 7D

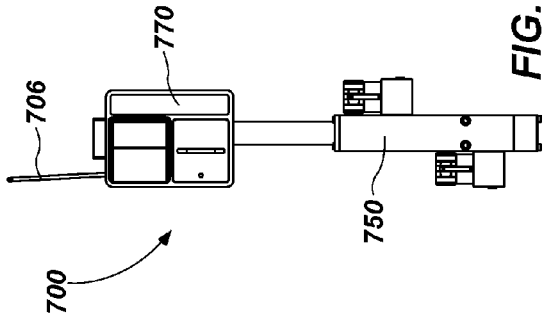

FIG. 7C

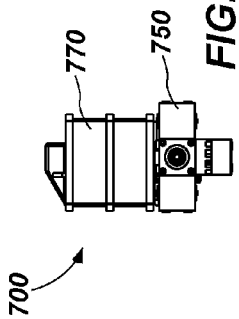

FIG. 7B

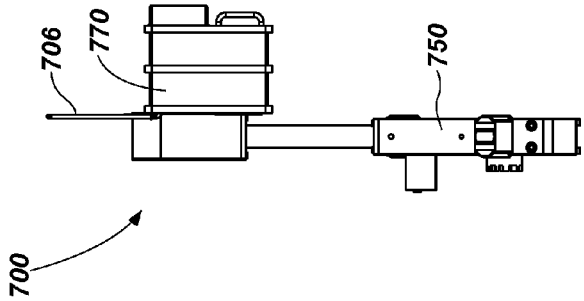

FIG. 7E

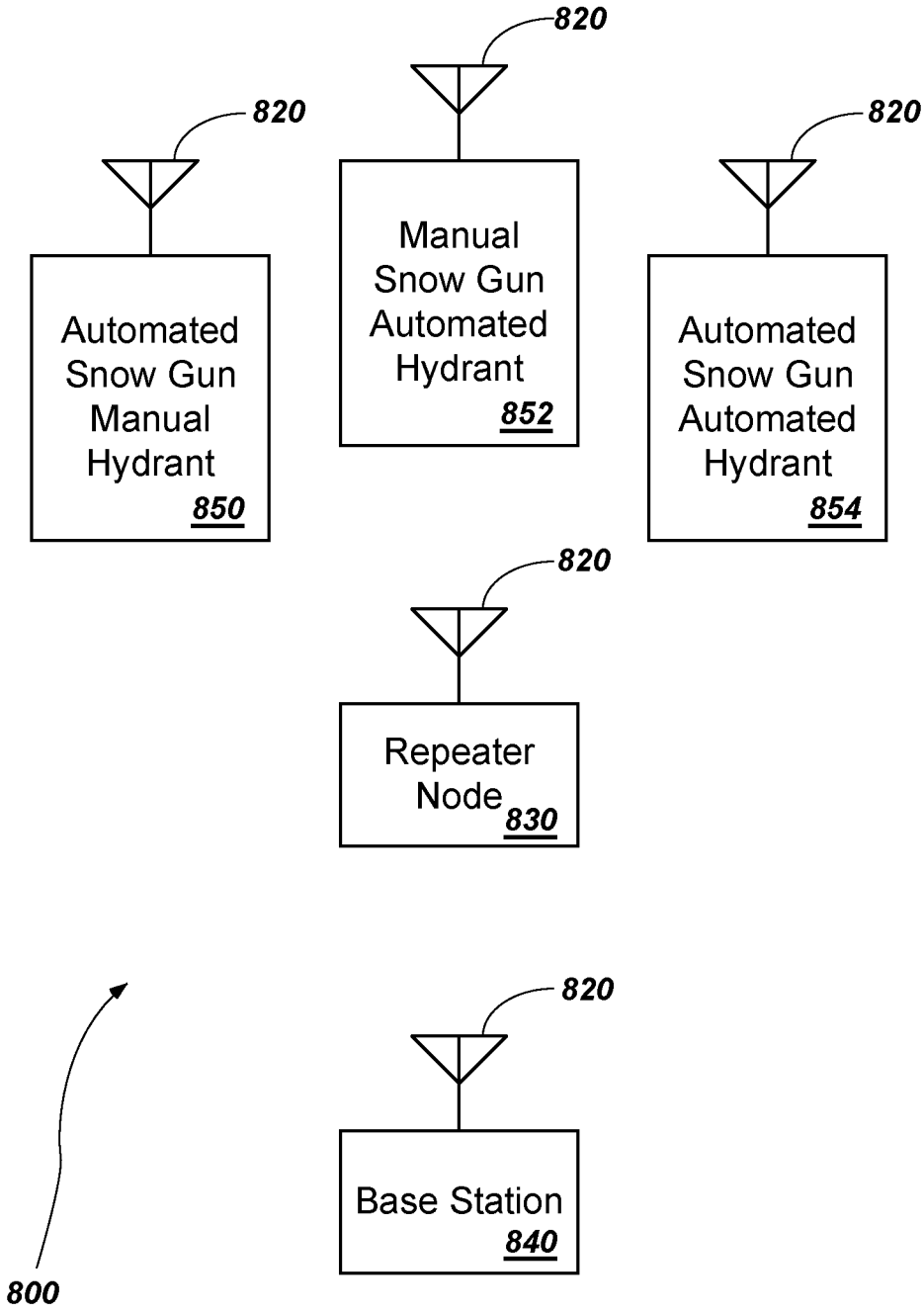
820
820
820
Automated Snow Gun Manual Hydrant
850
Manual Snow Gun Automated Hydrant
852
Automated Snow Gun Automated Hydrant
854
820
Repeater Node
830
820
Base Station
840
800

FIG. 8

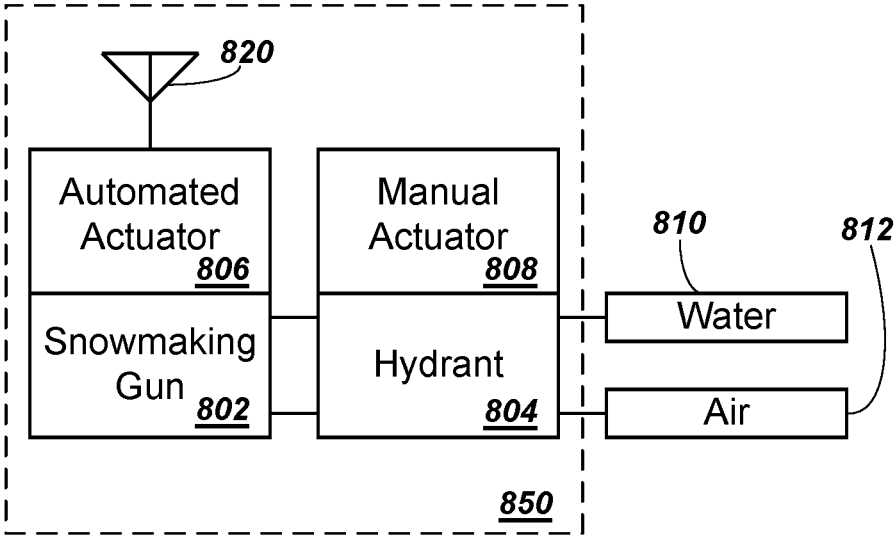
820
Automated Actuator
806
Manual Actuator
808
810
812
Water
Snowmaking Gun
802
Hydrant
804
Air
850

FIG. 9

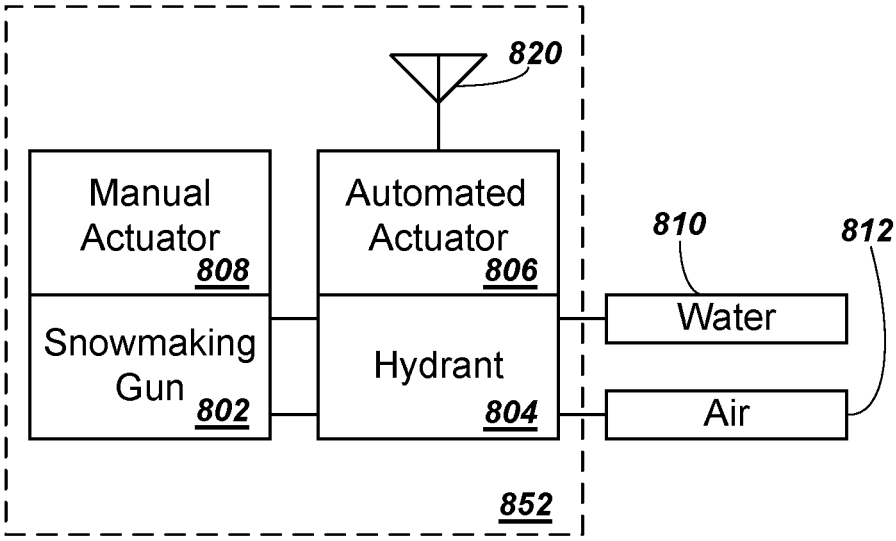
820
Manual Actuator
808
Automated Actuator
806
810
812
Water
Snowmaking Gun
802
Hydrant
804
Air
852

FIG. 10

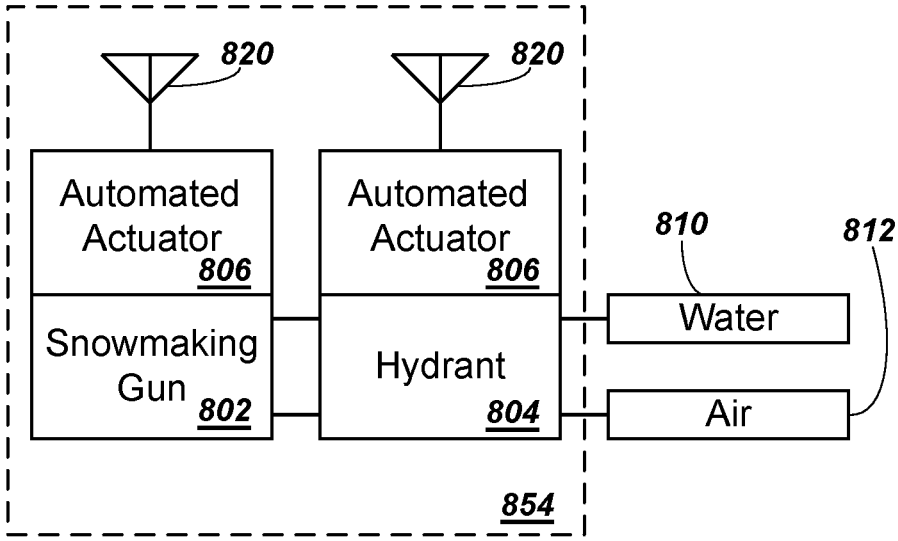
820
820
Automated Actuator
806
Automated Actuator
806
810
812
Water
Snowmaking Gun
802
Hydrant
804
Air
854

FIG. 11

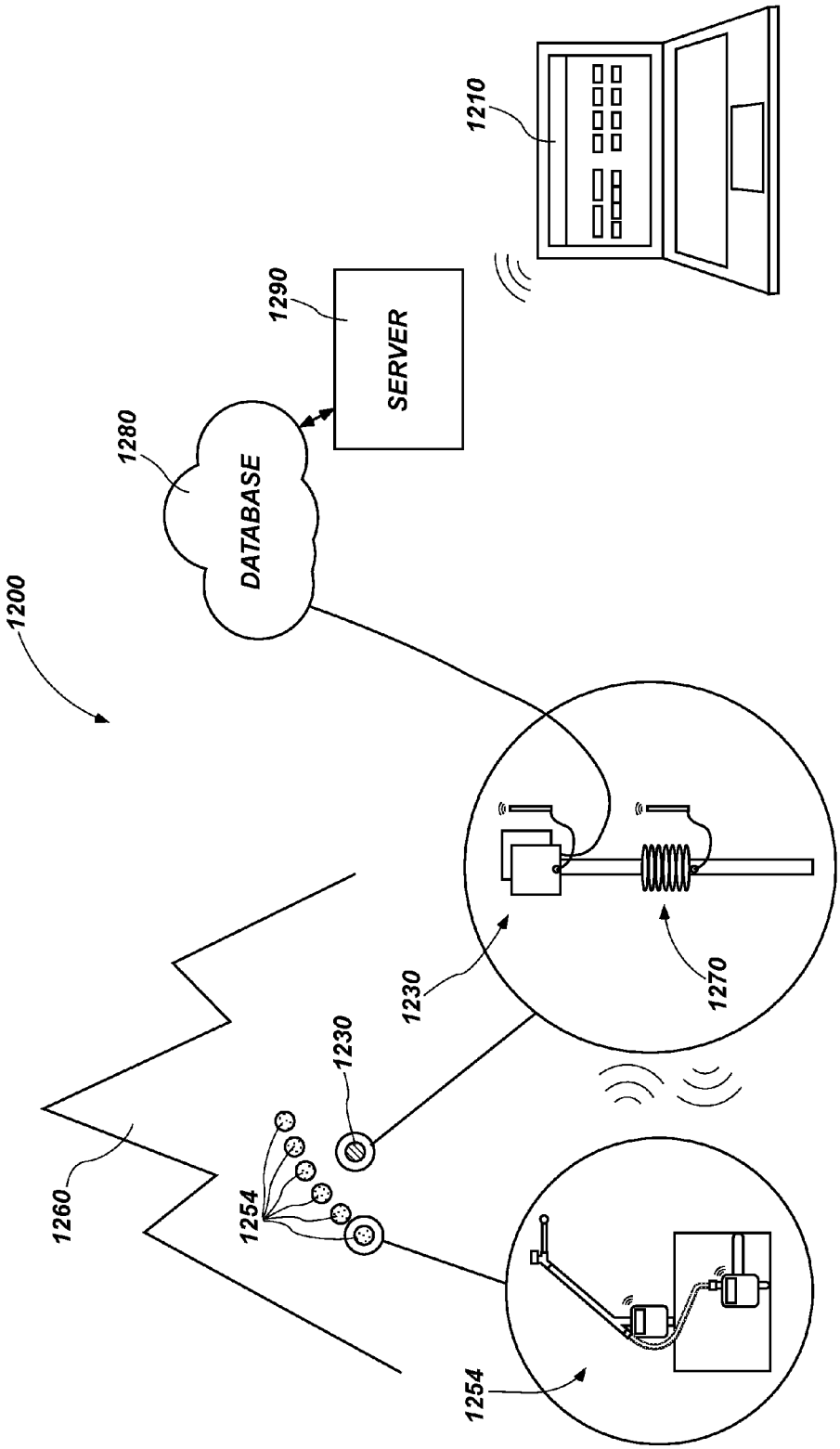
1200
1210
1290
SERVER
1280
DATABASE
1230
1270
1230
1260
1254
1254

FIG. 12

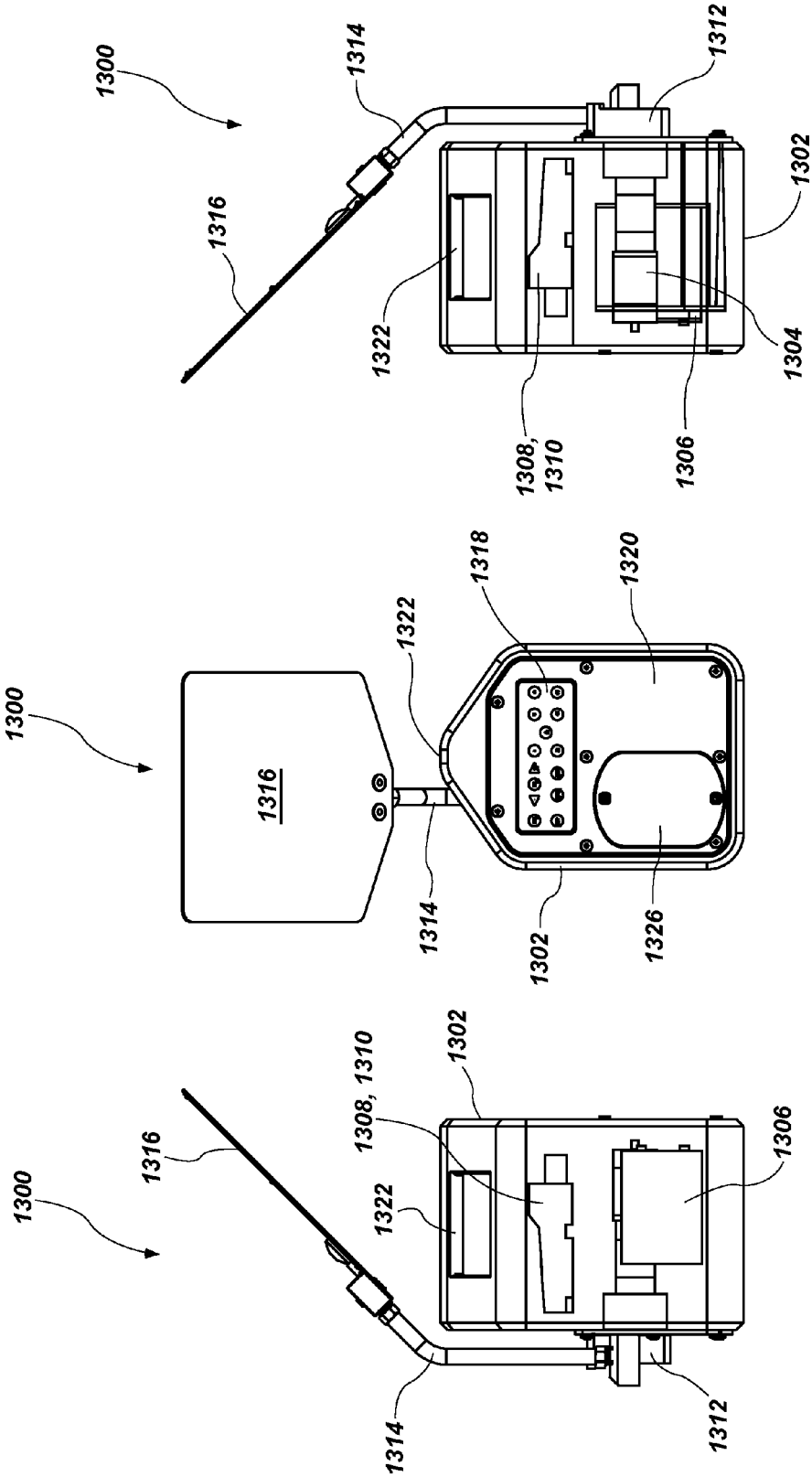

FIG. 13C

FIG. 13B

FIG. 13A

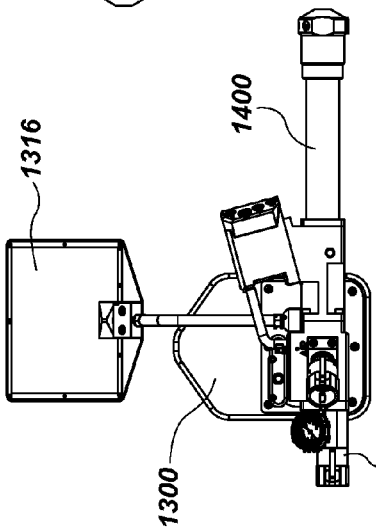

FIG. 14A

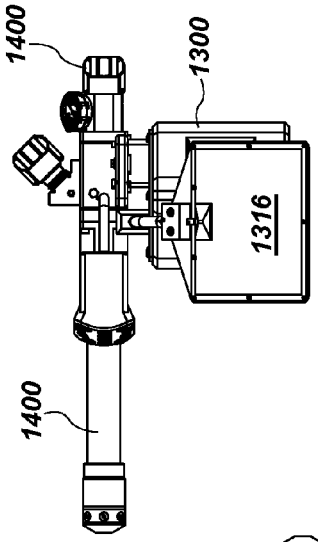

FIG. 14B

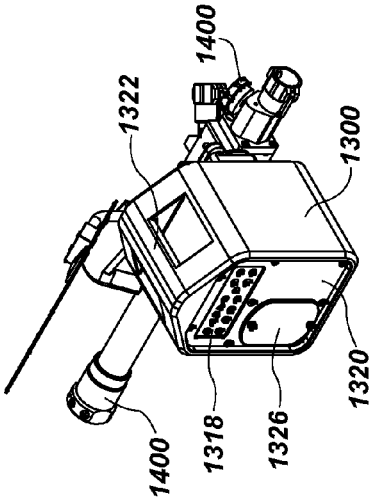

FIG. 14C

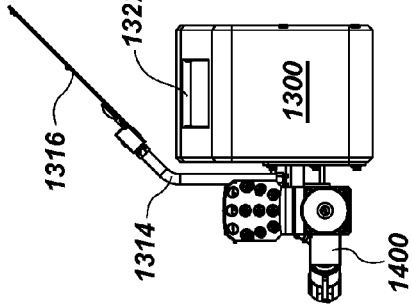

FIG. 14D

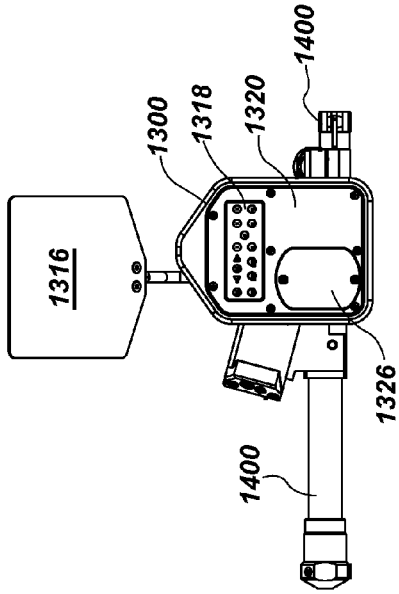

FIG. 14E

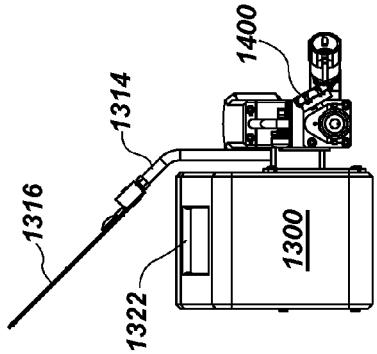

FIG. 14F

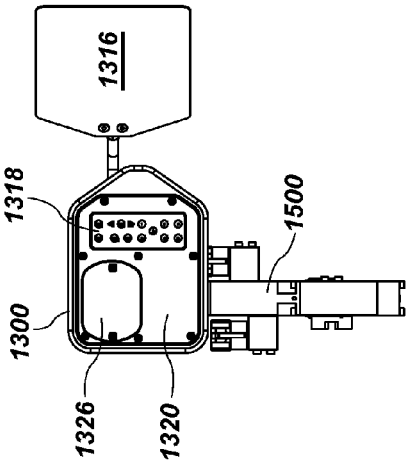

FIG. 15C

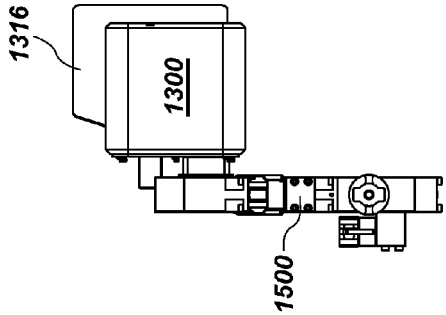

FIG. 15F

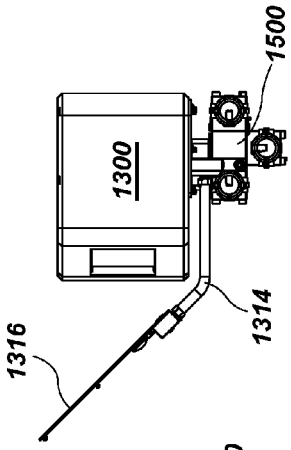

FIG. 15B

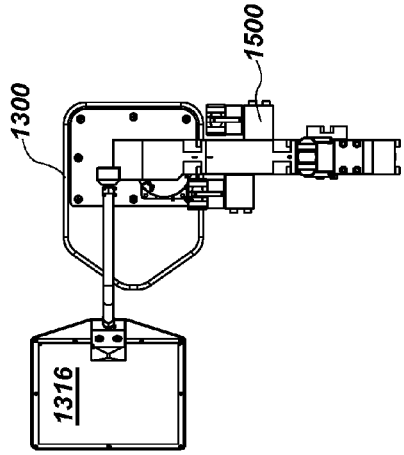

FIG. 15E

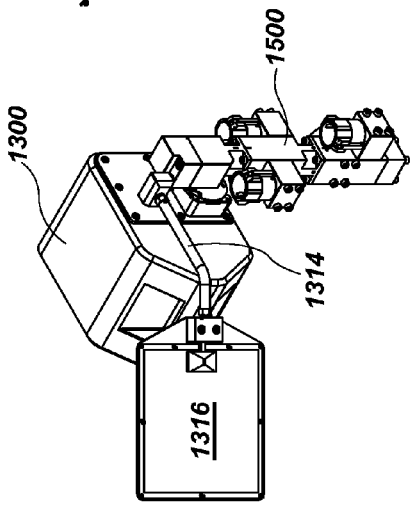

FIG. 15A

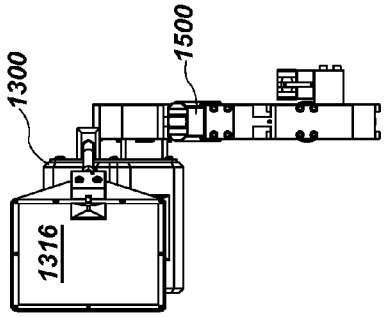

FIG. 15D

SNOWMAKING AUTOMATION SYSTEM AND MODULES

CROSS-REFERENCE TO RELATED APPLICATIONS

[0001] This utility patent application claims benefit and priority to U.S. provisional patent application No. 62/143,776, filed, Apr. 6, 2015, titled: "SNOWMAKING AUTOMATION SYSTEM", the contents of which are hereby incorporated by reference for all purposes as if fully set forth herein. This application is a counterpart to an international patent application filed contemporaneously on, Apr. 6, 2016, titled: "SNOWMAKING AUTOMATION SYSTEM AND MODULES".

[0002] This US nonprovisional patent application is also related to co-pending U.S. nonprovisional patent application Ser. No. 15/069,945, filed, Mar. 14, 2016, titled: "DUAL AUTO HYDRANT FOR SNOWMAKING EQUIPMENT AND METHOD OF USING SAME", the contents of which are also hereby incorporated by reference for all purposes as if fully set forth herein.

BACKGROUND OF THE INVENTION

[0003] 1. Field of the Invention

[0004] The present invention relates generally to systems and methods for making artificial snow. More particularly, this invention relates to automated systems for controlling the making of artificial snow. Still more particularly, the snowmaking automation system of the present invention provides remote automated control of snowmaking guns, compressed air sources and water hydrants arbitrarily located at a ski resort.

[0005] 2. Description of Related Art

[0006] Snowmaking equipment is commonly used at ski resorts to supplement natural snowfall when needed to adequately cover ski slope terrain otherwise covered with dirt, surface plants, gravel, rocks and other debris that prevents safe skiing or boarding on snow. Snowmaking equipment always requires a source of water from which snow may be created from atomized mists of water droplets that may, or may not, be seeded with nucleating ice crystals. Some snowmaking equipment requires electricity to run fans or operate equipment controls, data logging or other purposes. Still other snowmaking equipment may require a source of compressed air used to accelerate atomized mists of water droplets and optionally the nucleating ice crystals into the atmosphere so that the water droplets can freeze in the air before falling to the surface intended for the artificial snow.

[0007] Snowmaking guns, such as those offered by Snow Logic, Inc., Park City, Utah, typically require a source of water and a source of compressed air to operate. The water source may be a physical pipeline that has been installed to a key location on a ski slope for the purpose of snowmaking. Alternatively, a well, temporary pipe, water hose, or any other suitable water source may be used for snowmaking. Typically, the water source must be pressurized to deliver it to a particular elevation and for use in pressurizing or charging the snowmaking gun. Some conventional water sources may be a creek, reservoir or well from which water may be extracted and pumped, typically at a pump house, through a fixed, preferably buried pipeline up along a ski run with periodic hydrants (vertical pipes) that provide water at the surface for snowmaking.

[0008] Similarly, the compressed air source may be a compressed air pipeline, air hose, air compressor, or other suitable compressed air source that has been located adjacent to or near the desired location for snowmaking. Some conventional snowmaking systems have compressed air pipelines that may parallel the water pipelines, e.g., 2-3 feet apart up a ski slope, and again, preferably underground, e.g., about 4 feet below the surface. Pressurized air discharged from an air compressor is generally too hot at about, 180-200° F., for use in snowmaking. So, the heated compressed air may be initially cooled by a primary cooling device known as an aftercooler. The aftercooler may consist of pipes surrounded by cold water through which the air passes and cools. The cooling of the air may also cause condensation of the air's moisture which must also be removed to prevent frosting of the air hoses used subsequently to deliver pressurized air to a snow gun. So, the cooled air with some moisture removed leaves the aftercooler and may enter a secondary cooling device, known as a stripping tower. The stripping tower in essence freeze dries the cooled air and further removes moisture. The colder compressed air leaving the stripping tower may have dropped in temperature to a range of about 45-55° F. The compressed air and pressurized water pipelines may also serve to further reduce the temperature of both to a temperature range of about 34-35° F., and may further dry the compressed air, if uninsulated pipes are used. However, a water droplet passing through a conventional snow gun may range from 34-44° F. depending on how the water is sourced.

[0009] The snowmaking gun used to make artificial snow may also be used in combination with a hydrant for controlling the water source and for controlling the compressed air source. Snow Logic, Inc., offers a dual auto hydrant that can safely control both the water source and compressed air source feeding a snowmaking gun.

[0010] Conventional snowmaking guns and hydrants are typically manually operated by snowmaking staff at a ski resort. It is generally time consuming for ski resort staff to travel to any and all of the various locations on a given mountain where snowmaking equipment is located. Additionally, the ideal time to operate snowmaking equipment may be anytime during the day or night as long as the ambient temperature and snowmaking conditions are correct. Consequently, there may be undesirable labor costs associated with snowmaking. But, these are not the only problems associated with conventional snowmaking systems and prior attempts at automating the snowmaking process.

[0011] Another problem with conventional fixed location snowmaking automation is that it may rely on buried or above ground power to operate the system and actuators. Such automation is "fixed" because it is tied to the fixed location of the buried or above ground power source used to operate the system. The cost of electrical infrastructure necessary to automate every possible location where snowmaking is desired on the mountain of a ski resort is expensive and invasive to the environment. Many snowmaking guns at ski resorts do not have such electrical infrastructure. Yet another problem with conventional fixed location automation used by ski resorts is that it typically only runs an average of 110-160 hours per season. Depending on the cost

of such fixed automation, this may result in a long duration (perhaps years) before reaching a return on the investment. Still another problem with such conventional fixed location automation systems is that repair and maintenance of such fixed location automation systems generally must be carried out in the field, i.e., on the mountain.

[0012] Additionally, resorts may not have trained or experienced staff to troubleshoot and repair fixed snowmaking automation systems. There is a significant labor cost associated with hiring, training and maintaining qualified staff, or hiring outside technicians to troubleshoot and repair fixed snowmaking automation systems. There will always be a need to troubleshoot and repair snowmaking automation over time during actual use. For example, any kind of snowmaking equipment may be subject to malfunction from electrical (lightning strikes) during storms or mechanical (frozen pipes, avalanches, etc.)

[0013] Conventional hydrants and their associate valving, if not properly drained when not in use, can become dangerous. For example, on Dec. 7, 1998, Kevin E. Turner, Environmental Manager, Homewood Ski Resort, Homewood, Calif. (west shore of Lake Tahoe), was severely injured when a brass ball valve installed between a hydrant and a snow gun failed because water froze inside the valve and caused the valve cap to partially separate from the valve body and ultimately exploded because of unreleased compressed air. *Kevin E. Turner* v. *Northern Indiana Brass Co. d/b/a NIBCO and Western Nevada Supply Co.,* No SCV 9387, 2009 WL 132814 (Cal. Superior).

[0014] Finally, conventional snowmaking automation tends to be proprietary as it is made for a particular type (gun or fan) and brand of snowmaking gun. Thus, implementing snowmaking automation at a given resort becomes costly and difficult because the conventional snowmaking automation systems are generally tied to the particular guns already installed. Snowmaking automation is also expensive when replacing existing equipment with new equipment that supports the desired automation.

[0015] Accordingly, there exists a need in the art for automated snowmaking equipment for automatically generating artificial snow using hydrants and snowmaking guns, that reduces ski resort labor costs, solves at least some of the above identified problems with conventional fixed automation systems, and provides greater control over the snowmaking process.

SUMMARY OF THE INVENTION

[0016] An embodiment of a snowmaking automation system for remotely controlling the generation of snow is disclosed. The system may include a hydrant for selectively receiving and delivering pressurized water and compressed air. The system may further include a snowmaking gun coupled to the hydrant to selectively receive the pressurized water and the compressed air. The system may further include at least one automation module coupled to the hydrant or the snowmaking gun, each of the at least one automation modules having a means for communication and a motor for actuating the snowmaking gun or the hydrant to selectively generate snow using the water and the air. The system may further include a base station in communication with the at least one automation module, the base station configured to provide a user control of the at least one automation module and thereby remotely control generation of the snow.

[0017] An embodiment of a snowmaking automation module is disclosed. The module may include a housing with an actuator interface for attachment to a snowmaking gun or a hydrant. The module may further include a gear motor mounted inside the housing and coupled to the actuator interface, the gear motor configured to selectively drive a snowmaking gun or a hydrant. The module may further include a radio modem and antenna mounted inside the housing. The module may further include a battery mounted inside the housing, the battery coupled to, and configure for powering, the gear motor and the radio modem.

[0018] Additional features and advantages of the invention will be apparent from the detailed description which follows, taken in conjunction with the accompanying drawings, which together illustrate, by way of example, features of embodiments of the present invention.

BRIEF DESCRIPTION OF THE DRAWINGS

[0019] The following drawings illustrate exemplary embodiments for carrying out the invention. Like reference numerals refer to like parts in different views or embodiments of the present invention in the drawings.

[0020] FIG. **1** is a system level block diagram of a snowmaking automation system according to an embodiment of the present invention.

[0021] FIG. **2** is a block diagram of a base station according to an embodiment of the present invention.

[0022] FIG. **3** is a block diagram of a snowmaking gun automation module according to an embodiment of the present invention.

[0023] FIG. **4** is a block diagram of a repeater according to an embodiment of the present invention.

[0024] FIG. **5** is a block diagram of a hydrant automation module according to an embodiment of the present invention.

[0025] FIGS. **6**A-**6**C are perspective, front and top views, respectively, of a snowmaking gun automation module attached to a snowmaking gun according to an embodiment of the present invention.

[0026] FIGS. **7**A-**7**E are perspective, bottom, front, top and left side views, respectively, of a hydrant automation module attached to a dual auto hydrant according to an embodiment of the present invention.

[0027] FIG. **8** is a block diagram of an embodiment of an automated snowmaking system according to the present invention.

[0028] FIG. **9** is a block diagram of an embodiment of an automated snow gun with manual hydrant according to the present invention.

[0029] FIG. **10** is a block diagram of an embodiment of a manual snow gun with automated hydrant according to the present invention.

[0030] FIG. **11** is a block diagram of an embodiment of an automated snow gun with automated hydrant according to the present invention.

[0031] FIG. **12** is a diagram of another embodiment of an automated snowmaking system according to the present invention.

[0032] FIGS. **13**A-**13**C are left side, front and right side views of an embodiment of a snowmaking automation module according to the present invention.

[0033] FIGS. **14**A-**14**F are left side, top, front-right perspective, front, right side and rear views of an embodiment

of a snowmaking gun with a snowmaking automation module installed according to the present invention.

[0034] FIGS. **15**A-**15**F are rear perspective, top, front, right side, rear and left-side view of an embodiment of a hydrant with a snowmaking automation module installed according to the present invention.

DETAILED DESCRIPTION OF THE INVENTION

[0035] Embodiments of the invention include a snowmaking automation system for use with snowmaking guns and hydrants. Embodiments of the snowmaking automation system described herein may be battery powered, and thus do not require fixed electrical infrastructure, but are designed to use such infrastructure if present on the mountain. The battery life is designed to operate the actuator for 150-200 hours before recharging according to embodiments of a snowmaking automation system of the present invention disclosed herein. This range of time is typically required to complete a batch of snowmaking on a given run at a resort. Some embodiments of the snowmaking automation system are also wireless, and thus, do not require hard-wired communications between base stations and remotely controlled snowmaking guns and hydrants. Another advantageous feature is the anticipated lower cost of operation of the various embodiments of a snowmaking automation systems of the present invention.

[0036] Another advantageous feature of the snowmaking automation system is that the actuators employed are modular and can be exchanged between embodiments of the snowmaking gun and embodiments of the hydrant. This level of actuator modularity makes for simpler maintenance, because the actuators are both identical, thus two different actuators, and the associated duplication of inventory, are unnecessary. The embodiments of actuators of the present invention may be swapped out on the mountain and brought back to a workshop for repairs and maintenance. Alternatively, the actuators may be sent back to the manufacturer for repairs eliminating the need for an in-house technician at the resort. The automation modules may be swapped out based on battery charge (need for recharging) or repairs (malfunctions) or scheduled maintenance. For example, damaged automation modules may be swapped out in the field with a replacement. The state and condition of the individual actuators can be tracked in real-time via the snowmaking automation system of the present invention.

[0037] According to one embodiment, the actuator on a Snow Logic snowmaking gun is capable of supplying power (24v) and control signals to a Snow Logic dual auto hydrant, thereby eliminating the need for a radio modem and battery associated with the dual auto hydrant actuator.

[0038] Still another advantageous feature of embodiments of the snowmaking automation system of the present invention is that it communicates via a radio network. However, embodiments are also capable of communication by a "hard-wired" link, e.g., Ethernet, optical fiber, twisted pair or any other suitable network cabling if already present at a fixed location on the mountain.

[0039] According to another embodiment, each actuator may have an onboard Global Positioning System (GPS) module so that each automation module may be physically tracked by the snowmaking automation system of the present invention, for example by a master control computer. This feature is particularly useful, e.g., in determining the location of a module that needs servicing or recharging.

[0040] Yet another advantageous feature of embodiments of the snowmaking automation system employing GPS modules of the present invention is that water pressure sensors may become unnecessary for each snowmaking gun at each individual location. This is because the water pressure may be obtained by measurement from the pump house (original water source) only and then extrapolating pressure by using GPS altitude. This can reduce overall system cost by eliminating water pressure sensors.

[0041] Another advantageous feature of embodiments of the snowmaking automation system of the present invention is that there is virtually no limit on the number of adjustments of snowmaking parameters that may be made during a given snowmaking production run. In contrast, manual adjustment by a technician on location at the snowmaking equipment on a mountain typically only occurs 2-5 times per night. By removing the adjustment limitations inherent in manual systems, snowmaking production may be optimized and maximized, while reducing costs. This feature improves snow making production capabilities and snow quality. According to one embodiment, the snowmaking automation system of the present invention is capable of making adjustments to the snowmaking parameters every 15 minutes as ambient conditions change.

[0042] Embodiments of the snowmaking automation system of the present invention in combination with a Snow Logic dual auto hydrant provide the capability to automate any conventional type or brand of air water snowmaking gun. This feature is believed to be a first in the industry. Thus, embodiments of the snowmaking automation system of the present invention used in conjunction with a Snow Logic dual auto hydrant can be used to retrofit existing conventional air and water snowmaking systems with automation. This allows for a master control computer (base station) within the snowmaking automation system of the present invention to control different brands and types of snowmaking technology.

[0043] It will be apparent that various configurations of the snowmaking automation system of the present invention can be made to suit particular needs of a given resort. For example, the automation may be used to automate the hydrant and leave the gun in a manual configuration, or the reverse, where the gun is automated and the hydrant is manually operated. Of course, the most flexible control occurs when both the gun and hydrant are automated.

[0044] Finally, because of the modularity of the snowmaking automation system of the present invention, there are various business models that could be employed with the deployment of such snowmaking equipment, e.g., direct sales to the resort, rental or leasing of the equipment to the resorts. This feature gives ski resorts great flexibility in how they choose to implement snowmaking automation and control over their direct labor costs.

[0045] The terms "snowmaking gun" and "snow gun" are used interchangeably herein and are understood to be a device configured to convert water to snow under the appropriate atmospheric conditions. Exemplary snow guns are available from Snow Logic, Inc., Park City, Utah, and may be as described in U.S. Pat. No. 9,170,041 to Dodson. The terms "automated actuator", "snowmaking automation module" and "black box" are also used interchangeably and synonymously herein and are understood to be a device that

may be interchangeably attached to either a snowmaking gun or a hydrant through a common actuator interface according to the embodiments of the invention disclosed herein. This interchangeable feature of the automated actuator or snowmaking automation module is believed to be a unique and useful feature that provides greater flexibility in implementing, servicing and maintaining a given snowmaking automation system.

[0046] Referring now to FIG. **1**, an embodiment of a system level block diagram of a snowmaking automation system **100** is shown, according to present invention. System **100** may include one or more (one shown) snowmaking guns **102** in communication **106** with a hydrant **104**. Typically at each location where snowmaking takes place, a snowmaking gun **102** may be physically connected (not shown) to the hydrant **104** via water and optionally compressed air hoses (also not shown). The hydrant **104** is further connected to a pressurized water source **108**. A compressed air source **110** may be physically connected with a compressed air hose to the snowmaking gun as shown in the embodiment of FIG. **1**. Alternatively, the compressed air source **110** may be connected to valving in the hydrant **104**, where the hydrant **104** is a dual auto hydrant, such as the one disclosed in co-pending U.S. provisional patent application No. 62/133,289, filed, Mar. 13, 2015, titled: "DUAL AUTO HYDRANT FOR SNOWMAKING EQUIPMENT". In this alternative configuration, the snowmaking gun **102** is physically connected (not shown) to the hydrant **104** via a water hose (also not shown) and compressed air hose (also not shown).

[0047] System **100** may further include a base station **112** that is in communication **116** with one or more (one shown) repeater nodes **114** and is also in communication **118** with the one or more snowmaking guns **102**. The communications **116** and **118** may be wireless or wired depending on the particular embodiment. Of course, the wireless communication (**106**, **116**, **118**) embodiments offer the greatest flexibility in terms of locating the gun **102** and hydrant **104** on a given mountain location (not shown).

[0048] The repeater nodes **114** are used to provide wireless connectivity between the base station **112** and each snowmaking gun **102** and hydrant **104** in the varied topography that one might encounter on a mountain resort ski slope. Each repeater node **114** operates much like a cellphone tower to provide geographic coverage of the wireless network. The repeater nodes **114** may be located anywhere on the mountain and used to provide full coverage of terrain that is subject to snowmaking. The repeater nodes **114** may operate at any suitable radio frequency (RF) or band of frequencies and use any suitable communications protocol. The repeater nodes **114** may be portable or fixed in physical location according to other embodiments of the present invention.

[0049] Another advantageous feature of embodiments of the snowmaking automation system of the present invention is that the RF repeater nodes **114** may be employed to cover any mountainous terrain with a wireless network for use by the snowmaking automation system. Dead spots and optimal placement of repeater nodes **114** may be determined by any suitable RF signal detector (not shown). Such an RF signal detector may be designed and used to audit the locations of snowmaking equipment, e.g., snowmaking gun **102** and hydrant **104**, to easily determine dead spots (no wireless network signal) and preferred placement of portable RF repeater stations for complete network coverage on the mountain. For example, the RF signal detector may be backpack mounted or hand carried for skiing or snowshoeing over ski trails to snowmaking locations, or otherwise mounted on a vehicle, snowmobile or snow cat to perform such a network audit as well as for initial repeater node **114** placement.

[0050] Referring now to FIG. **2**, a block diagram of a particular embodiment of a base station **200** is shown, according to the present invention. The base station **200** may include a general purpose computer or personal computer (PC) **212**, having memory **202** for storing software, namely a web application **204** that is configured and programmed to control and operate the snowmaking automation system **100** (FIG. **1**) of the present invention. Computer **212** may have a connection **206** to the Internet **208**. The connection **206** may be a wireless or wired connection using routers, wireless or otherwise, using hardware that is well known to those of ordinary skill in the art. The web application **204** may be used at the base station **200** to remotely monitor and control all aspects of snowmaking production. It is further contemplated that a suitable mobile application (app) could provide mobile remote control of snowmaking production from a mobile smartphone in much the same way a computer **212** would control production.

[0051] Computer **212** may further be connected **210** to a radio **214** which may be further connected to an antenna **218** via an optional arrestor **216** through suitable RF cabling **220**, **222**. Arrestor **216** provides electrical surge protection from lightning strikes for example. The radio **214** is used to wirelessly connect to each of the snowmaking guns **102** (see FIG. **1**) and hydrants **104** (see FIG. **1**) that are located on the mountain resort via the repeater nodes **114** (see FIG. **1**) if necessary. Power for the computer **212**, radio **214** and any of the other components (Internet modem or router neither shown, computer peripherals, i.e., monitor, printer, etc., also not shown) that require power, may be sourced from the building (not shown) or location where the base station **200** is located, e.g., the power block **224** shown in FIG. **2**.

[0052] Referring to FIG. **3**, a block diagram of a snowmaking gun automation module **300** is shown, according to an embodiment of the present invention. Module **300** may include a processor **302** for controlling module **300**. Processor **302** may be in communication **308** with a radio **304**. Radio **304** may be connected **310** to an antenna **306**. Connection **310** may comprise an RF cable. Processor **302** may be in communication **312** with a GPS module **314**. The GPS module **314** provides accurate location information relating to the snowmaking gun **102** (see FIG. **1**) that it is attached to.

[0053] Module **300** may further include an actuator, see dashed line enclosure **316**, that is physically connected to the snowmaking gun **102** (not shown, but see FIG. **1**). Actuator **316** is in communication **334**, **336** with the processor **302**. The actuator **316** drives the mechanical valving within the snowmaking gun **102** under processor **302** control. The actuator **316** may include a motor driver **318**, which is in communication with a motor **320**, which is in turn in communication with an encoder **322**.

[0054] Processor **302** may further be in communication **324** with a hydrant **326**. Communication **324** may be wireless or hard-wired according to various embodiments of the present invention. According to a hard-wired communication **324** embodiment, power, optional data and control

signals may be transmitted between processor **302** and hydrant **326** via a waterproof connector **328**. Processor **302** may further be in communication **332** with a temperature and humidity sensor **330**. The temperature and humidity information from sensor **330** may be transmitted back to the base station **112**, **200** for adjusting snowmaking parameters of the guns **102** and hydrant **104**

[0055] Processor **302** may further be in communication **338** with a user interface **340**. The user interface **340** may be a dedicated weather-proofed panel configured with LED indicators, buttons, switches, test points and anything else used to control the module **300**. The buttons may be used to manually open, or advance, the valve, manually close the valve, test the communications link, and to obtain battery status. LED indicators may indicate gun valve positioning (1-4 for a 4-step gun), communications signal connection and signal strength, GPS communications, etc. Alternatively, user interface **340** may be a touch panel configured appropriately to manually control the snowmaking gun **102**, according to another embodiment. The configuring and programming of a touch panel is within the knowledge of one of ordinary skill in the art, and thus, will not be further elaborated herein.

[0056] A particularly useful and novel feature of one embodiment of module **300** is that it can be battery operated for between 150-200 hours on a single charge. As shown in FIG. **3**, processor **302** may be connected to power circuitry **352** which forms an interface to battery **350**. Power circuitry **352** converts the stored battery power for use by the processor **302**, actuator **316** and radio **304** and any other component that needs power. Battery **350** may be of any suitable battery technology. The presently preferred battery technology for module **300** is lithium iron battery technology because of its ability to operate in extreme cold weather conditions.

[0057] Referring now to FIG. **4**, a block diagram of a repeater **400** is shown, according to an embodiment of the present invention. Repeater **400** may include a processor **402** in communication **408** with a radio **404**. Radio **404** may be in communication **406**, **408** with antenna **410** via an arrestor **412** for lightening and electrical surge protection. Processor **402** may further be in communication **414** with a GPS module **416**.

[0058] Processor **402** may be further connected **420** to a user interface **418**. The user interface **418** may be a dedicated weather-proofed panel configured with LED indicators, buttons, switches, test points and anything else used to manually control the repeater **400**. For example buttons may include a button for testing the communication link. LED indicators may include communications OK, power indicator, RX LED and TX LED for indications regarding the receiving and transmission of data. Alternatively, user interface **418** may be a touch panel configured appropriately to control repeater **400**. Again the configuring and programming of a touch panel is within the knowledge of one of ordinary skill in the art, and thus, will not be further elaborated herein.

[0059] Power to drive the repeater **400** may come from power mains **422** available at the location on the hill where the repeater **400** is installed. Alternatively, power may be supplied by a battery (not shown), according to another embodiment. Thus, repeater **400** may also be located anywhere and moved if necessary. Power circuitry **424** may be used to condition the power from the power mains **422**, or battery (not shown) prior to distribution to the processor **402**, radio **404**, and anything else that needs powering within repeater **400**.

[0060] Referring now to FIG. **5** a block diagram of a hydrant automation module **500** is shown, according to an embodiment of the present invention. Module **500** may further include an actuator, see dashed line box shown at **504**. Actuator **504** is physically connected to the hydrant **104** (not shown, but see FIG. **1**). Actuator **504** is in communication **512**, **514** with the processor **502**. The actuator **504** drives the mechanical valving within the hydrant **104** under processor **502** control. The actuator **504** may include a motor driver **506**, which is in communication with a motor **508**, which is in turn in communication with an encoder **510**. Processor **502** may further be in communication **516** with a user interface **520** similar to the user interfaces **340** and **418** provided for module **300** and repeater **400**, respectively.

[0061] According to the embodiment of hydrant automation module **500** shown in FIG. **5**, the module **500** obtains power from module **300** via waterproof connector **328**. Of course, the embodiment of module **500** illustrated is a hard-wired configuration. A wireless embodiment of module **500** would be similar to the module **300** shown in FIG. **3**.

[0062] FIGS. **6**A-**6**C are perspective, front and top views, respectively, of an automated snowmaking gun **600**. The automated snowmaking gun **600** may include a snowmaking gun automation module **300** attached to a snowmaking gun **602** according to an embodiment of the present invention. The actuator **316** within module **300** is coupled to the gun **600** and can remotely control the gun **600** from a base station **200** (not shown, but see FIG. **200**). The module **300** is shown with an externally mounted antenna **306** (FIGS. **6**A and **6**B).

[0063] FIGS. **7**A-**7**E are perspective, bottom, front, top and left side views, respectively, of an automated dual auto hydrant **700**. The automated dual auto hydrant **700** may include a wireless hydrant automation module **770** attached to a dual auto hydrant **750** according to an embodiment of the present invention. The wireless hydrant automation module **770** is essentially identical to the snowmaking gun automation module **300** discussed herein, but configured to drive the dual auto hydrant **750**. A presently preferred embodiment of a dual auto hydrant **750** may be as described in co-pending U.S. nonprovisional patent application Ser. No. 15/069,945, filed, Mar. 14, 2016, titled: "DUAL AUTO HYDRANT FOR SNOWMAKING EQUIPMENT AND METHOD OF USING SAME", the contents of which are incorporated by reference for all purposes as if fully set forth herein. Note that module **770** may include an externally mounted antenna **706**

[0064] FIG. **8** is a block diagram of an embodiment of an automated snowmaking system **800** according to the present invention. System **800** may include a plurality of snow guns with hydrants **850**, **852** and **854** located at select locations on a ski slope (not shown). Each snow gun with hydrant **850**, **852** and **854** may include an antenna **820** for wireless communication to a base station **840** which in turn has its own antenna **820**. Depending on the range of the wireless communications technology employed, system **800** may further include one or more repeater nodes **830** with an antenna **820** for extending the range of communications to each snow gun with hydrant **850**, **852** and **854**, regardless of how far from the base station **840** they may be.

[0065] The snow guns with hydrants **850**, **852** and **854**, may be configured in three ways. The first configuration is

an automated snow gun with manual hydrant **850**. In this first configuration, the snow gun can be controlled remotely from the base station **840**, but the hydrant remains manually operated. The second configuration is a manual snow gun with automated hydrant **852**. In this second configuration, the snow gun requires manual operation, but the hydrant can be controlled remotely from the base station **840**. The third configuration is a fully automated snow gun with automated hydrant **854**. In this third configuration both the snow gun and the hydrant can be remotely controlled from the base station **840**. FIGS. **9-11** provide additional detail and description of the snow guns with hydrants **850**, **852** and **854**.

[0066] FIG. **9** is a block diagram of an embodiment of an automated snow gun with manual hydrant **850** according to the present invention. The first configuration of an automated snow gun with manual hydrant **850** may include a snowmaking gun **802** with an automated actuator **806** installed. For example and not by way of limitation, snowmaking gun **802** may be as described in U.S. Pat. No. 9,170,041 to Dodson, the contents of which are incorporated by reference for all purposes as if fully set forth herein. The automated actuator **806** may include an antenna **820** for wireless communication with a base station **840** (see FIG. **8**) directly, or indirectly through a repeater node **830**.

[0067] The first configuration of an automated snow gun with manual hydrant **850** may further include a hydrant **804** having a manual actuator **808**. For example and not by way of limitation, hydrant **804** may be a dual auto hydrant as described in co-pending U.S. nonprovisional patent application Ser. No. 15/069,945, filed, Mar. 14, 2016, titled: "DUAL AUTO HYDRANT FOR SNOWMAKING EQUIPMENT AND METHOD OF USING SAME", the contents of which are incorporated by reference for all purposes as if fully set forth herein. For example and not by way of limitation, the manual actuator **808** contemplated herein may be a hydrant control lever, such as described in application Ser. No. 15/069,945 at reference number 174, which controls a rack and pinion mechanism **302** within the dual auto hydrant **100**. However, it will be understood that any hydrant from any manufacturer could be adapted for use with the automated actuators **806** described herein.

[0068] The first configuration of an automated snow gun with manual hydrant **850** may further include a pressurized water source **810** and a compressed air source **812**, both feeding the hydrant **804**. An exemplary pressurized water source **810** and compressed air source **812** have both been described in detail above. In this first configuration of an automated snow gun with manual hydrant **850**, both the water source **810** and air source **812** are manually controlled by the hydrant **804**, which in turn supplies the snowmaking gun **802**.

[0069] FIG. **10** is a block diagram of an embodiment of a manual snow gun with automated hydrant **852** according to the present invention. The second configuration of a manual snow gun with automated hydrant **852** may include a snowmaking gun **802** with a manual actuator **808** installed. For example and not by way of limitation, snowmaking gun **802** may be as described in U.S. Pat. No. 9,170,041 to Dodson, with a manual actuator **808** shown as a pinion handle **116** (U.S. Pat. No. 9,170,041 to Dodson).

[0070] The second configuration of a manual snow gun with automated hydrant **852** may further include a hydrant **804** with an automated actuator **806** installed. The automated actuator **806** may include an antenna **820** for wireless communication with a base station **840** (see FIG. **8**) directly, or indirectly through a repeater node **830**. The second configuration of a manual snow gun with automated hydrant **852** may further include a pressurized water source **810** and a compressed air source **812** feeding into hydrant **804**. In this second configuration a manual snow gun with automated hydrant **852**, both the water source **810** and air source **812** may be remotely controlled by the hydrant **804**, which in turn supplies the snowmaking gun **802**.

[0071] FIG. **11** is a block diagram of an embodiment of an automated snow gun with automated hydrant **854** according to the present invention. The third configuration of an automated snow gun with automated hydrant **854** may include a snowmaking gun **802** with an automated actuator **806** installed. The third configuration of an automated snow gun with automated hydrant **854** may further include a hydrant **804** with an automated actuator **806** installed. In this third configuration, the water source **810** and air source **812** feed the hydrant **804** which are remotely controlled to selectively pass through to the snowmaking gun **802** which in turn is remotely controlled to generate snow in the appropriate atmospheric conditions. This third configuration of an automated snow gun with automated hydrant **854** is believed to be the most labor cost effective as it does not need manual attendance from an operator at its actual location for long periods of time.

[0072] FIG. **12** is a diagram of another embodiment of an automated snowmaking system **1200** according to the present invention. A plurality (six shown) of automated snow gun and automated hydrants **1254** are located at designated positions on a mountain **1260** where snowmaking is desired. One or more repeater nodes **1230** (only one shown) may be strategically located on the mountain **1260** to provide a wireless radio connection to all of the automated snow gun and automated hydrants **1254**. One or more weather stations **1270** (only one shown) may be placed on the mountain at or near locations where snowmaking is desired. Such weather stations **1270** may include a variety of sensors for temperature, humidity, wind speed, barometric pressure and the like that are useful for determining atmospheric conditions for snowmaking. The weather stations **1270** may also communicate wirelessly with the repeater nodes **1230** to provide this real time weather information for use in fine tuning the snowmaking process and determining whether conditions are sufficient for making snow in the first place.

[0073] Data of interest, e.g., water flow rate, water pressure, compressed air pressure, temperature, operational duration, battery life, sensed at the snowmaking automation module may be gathered from each of the various snowmaking automation modules attached to the snowmaking guns and hydrants **1254** and transmitted back to a database **1280** for use by a server **1290** which may store a computer program (not shown) for controlling the snowmaking automation system **1200**, according to various embodiments of the present invention. A user (not shown) would interact with the snowmaking automation system **1200** using a computer **1210** with access to the server **1290** through a direct network connection or through the Internet if the database **1280** and/or server **1290** are located in the cloud, according to various embodiments of the present invention. The computer **1210** may or may not be located in a base station (**840**, FIG. **8**), according to embodiments of the present invention.

[0074] FIGS. **13**A-**13**C are left side, front and right side views of an embodiment of a snowmaking automation module **1300** according to the present invention. Module **1300** may include a housing **1302** for holding a gear motor **1304**, battery **1306** (shown in transparent view, FIGS. **13**A and **13**C), radio modem **1308** (shown in transparent view, FIGS. **13**A and **13**C) and GPS module **1310** (also shown in transparent view, FIGS. **13**A and **13**C). Housing **1302** may further include an actuator interface **1312** that is coupled to the gear motor **1304**. The actuator interface **1312** allows the snowmaking automation module **1300** to replace a user manually turning a handle or lever used to actuate the snow gun or hydrant.

[0075] Housing **1302** may further include a control panel **1318** and a battery box cover **1326** mounted along a front face panel **1320** of the housing **1302** and a handle **1322**. Control panel **1320** may be used to manually configure the snowmaking automation module **1300** for automatic operation based on the snowmaking gun or hydrant to which it is attached. The control panel **1320** may also be used to manually operate the gun or hydrant to which it is attached. The handle **1322** may be used to remove, transport and install the snowmaking automation module **1300** to and from snowmaking sites. Module **1300** may further include a flexible pipe **1314** which supports a solar panel **1316**. The solar panel **1316** provides passive recharging of the battery **1306**. Flexible pipe **1314** further houses electrical conduit from the solar panel **1316** to the battery. The embodiment of a radio antenna **1324** coupled to the radio modem **1308** is located within the housing **1302** as shown in FIG. **13**C. However, it will be understood that an antenna for radio communications could be located external to the housing **1302** in other embodiments of the present invention.

[0076] FIGS. **14**A-**14**F are left side, top, front-right perspective, front, right side and rear views of an embodiment of a snowmaking gun **1400** with a snowmaking automation module **1300** installed according to the present invention. Note that the snowmaking gun **1400** is not shown connected to pressurized water or compressed air sources that would be needed for snowmaking, in order to simplify illustrating the different views.

[0077] FIGS. **15**A-**15**F are rear perspective, top, front, right side, rear and left-side view of an embodiment of a hydrant **1500** with a snowmaking automation module **1300** installed according to the present invention. Note that the hydrant **1500** is not shown connected to pressurized water or compressed air sources for ease of illustrating the different views.

[0078] It will be understood that various combinations of hardware, firmware and software may be used to implement the command, control, raw data storage (database) and control program storage and execution (server) for controlling and monitoring all of the snowmaking automation modules **1300** or "black boxes" and repeater nodes **1230** dispersed about a mountainside at a ski resort, as well as, databases, servers and computers shown, for example in FIG. **12**. According to one embodiment, the software or code resident in the black boxes **1300**, may be firmware that sends status of the current state of the snow gun or hydrant to which it is attached and receives commands via a repeater node **1230**. According to one embodiment, the software in the black box is coded in the C language.

[0079] According to another embodiment, the computer code in a repeater node **1230** receives statuses from the black boxes **1300** and from transmitting weather stations **1270** and may convert bytes of data into JavaScript Object Notation (JSON) to transmit to the database **1280** for storage. The computer code in the repeater nodes may also be configured for receiving JSON coded data from the database **1280** and translating it into bytes sent to the black boxes **1300**. According to one embodiment, the software code of the repeater node **1230** and its radio modem **1308** may be coded in the Python scripting language.

[0080] According to still another embodiment, the computer code used in the database **1280** may be used to store data received from the repeater node **1230** and from the web interface input by a user of the system. According to an embodiment, the software code of the database **1280** may be coded in the Python scripting language and JavaScript and the database itself may be implemented using RethinkDB™, 32-bit. RethinkDB™ is an open-source, scalable JSON database used for real time web applications available at https://rethinkdb.com. However, it will be understood that other databases could be used to implement database **1280** as described herein.

[0081] According to yet another embodiment, the computer code in the server **1290** may be used to process data from the database for sending to the web interface and vice versa. According to a particular embodiment, the server **1290** may be implemented in Node.js™ available at https://nodejes.org. Node.js™ is an open-source, cross-platform runtime environment for developing server-side Web applications. According to one embodiment, JavaScript is the programming language used to implement modules within the Node.js development platform.

[0082] According to another embodiment, the web interface viewed in a browser on computer **1210** provides the user with an interface to control the black boxes **1300** from any computer/or smartphone with internet access. According to a particular embodiment, the software code used to implement the web interface may be JavaScript and HyperText Markup Language (HTML).

[0083] Having described a number of embodiments of the inventive snowmaking automation system and its associated snowmaking automation modules with reference to the drawing figures, additional more general embodiments of the system and modules will now be described.

[0084] An embodiment of a snowmaking automation system for remotely controlling the generation of snow is disclosed. The system may include a hydrant for selectively receiving and delivering pressurized water and compressed air. The system may further include a snowmaking gun coupled to the hydrant to selectively receive the pressurized water and the compressed air. The system may further include at least one automation module coupled to the hydrant or the snowmaking gun, each of the at least one automation modules having a means for communication and a motor for actuating the snowmaking gun or the hydrant to selectively generate snow using the water and the air. The system may further include a base station in communication with the at least one automation module, the base station configured to provide a user control of the at least one automation module and thereby remotely control generation of the snow.

[0085] According to another embodiment of the snowmaking automation system, the at least one automation module may include a first automation module coupled to the hydrant and a second automation module coupled to the

snowmaking gun. According to yet another embodiment of the snowmaking automation system, the means for communication may be wireless radio communication, hardwired network communication, or optical fiber communication. According to still another embodiment, the snowmaking automation system may further include at least one repeater node linking wireless communication between the base station and the at least one automation module. According to still another embodiment, the snowmaking automation system may further include a weather station in communication with the repeater node. The weather station may be configured for sensing and transmitting atmospheric weather conditions back to a database for use by a server.

[0086] According to another embodiment, the snowmaking automation system may further include a database in communication with the at least one automation module for storing data gathered from the at least one automation module. According to another embodiment, the snowmaking automation system may further include a server in communication with the at least one automation module and the database. The server may be configured for storing and running a computer software program configured for remotely interacting with and controlling the at least one automation module and the database according to one embodiment. According to another embodiment, the snowmaking automation system may further include a computer with a user interface or web interface in communication with the server, the database and the at least one automation module. The computer with the user interface may be configured to remotely interact with and control the at least one automation module according to one embodiment.

[0087] According to a particular embodiment of a snowmaking automation system, the at least one automation module further include a housing with an actuator interface for attachment to a snowmaking gun or a hydrant. The at least one automation module may further include a gear motor with encoder mounted inside the housing and coupled to the actuator interface, the gear motor configured to selectively drive a snowmaking gun or a hydrant according to this embodiment. The at least one automation module may further include a radio modem and antenna mounted inside the housing. The at least one automation module may further include a battery mounted inside the housing, the battery coupled to, and configure for powering, the gear motor and the radio modem.

[0088] An embodiment of a snowmaking automation module is disclosed. The module may include a housing with an actuator interface for attachment to a snowmaking gun or a hydrant. The module may further include a gear motor mounted inside the housing and coupled to the actuator interface, the gear motor configured to selectively drive a snowmaking gun or a hydrant. The module may further include a radio modem and antenna mounted inside the housing. The module may further include a battery mounted inside the housing, the battery coupled to, and configure for powering, the gear motor and the radio modem.

[0089] Another embodiment of the snowmaking automation module may further include a control panel mounted to the outside of the housing. The control panel may be configured for a user to manually control the snowmaking automation module and either a snowmaking gun or a hydrant to which it is attached and to configure the automation module for remote operation. Still another embodiment of the snowmaking automation module may further include a solar panel mechanically coupled to the housing and electrically coupled to the battery for passively supplementing life of the battery. Yet another embodiment of the snowmaking automation module may further include a flexible pipe for mechanically coupling the solar panel to the housing and electrically coupling the solar panel to the battery. The flexible pipe may be configured to allow manual aiming of the solar panel to maximize solar power conversion efficiency according to one embodiment. Another embodiment of the snowmaking automation module may further include a global positioning system (GPS) module mounted in the housing and coupled to the radio modem. The GPS module may be configured for determining the position of the automation module and providing position information to the radio modem, which in turn may be relayed to the database, server and user at a web interface located anywhere, including in a base station. Still another embodiment of the snowmaking automation module may further include a handle formed into the housing. The handle may be configured for a user to remove, transport or mount the snowmaking automation module on the equipment (snow gun or hydrant) to which it is attached.

[0090] In understanding the scope of the present invention, the term "configured" as used herein to describe a component, section or part of a device includes hardware and/or software that is constructed and/or programmed to carry out the desired function. In understanding the scope of the present invention, the term "comprising" and its derivatives, as used herein, are intended to be open ended terms that specify the presence of the stated features, elements, components, groups, integers, and/or steps, but do not exclude the presence of other unstated features, elements, components, groups, integers and/or steps. The foregoing also applies to words having similar meanings such as the terms, "including", "having" and their derivatives. Also, the terms "part," "section," "portion," "member" or "element" when used in the singular can have the dual meaning of a single part or a plurality of parts. As used herein to describe the present invention, the following directional terms "forward, rearward, above, downward, vertical, horizontal, below and transverse" as well as any other similar directional terms refer to those directions of a snowmaking gun or snowmaking automation module attached to a snowmaking gun as appropriate and according to the present invention. Finally, terms of degree such as "substantially", "about" and "approximately" as used herein mean a reasonable amount of deviation of the modified term such that the end result is not significantly changed.

[0091] It will further be understood that the present invention may suitably comprise, consist of, or consist essentially of the component parts, method steps and limitations disclosed herein. However, the invention illustratively disclosed herein suitably may be practiced in the absence of any element which is not specifically disclosed herein.

[0092] While the foregoing advantages of the present invention are manifested in the illustrated embodiments of the invention, a variety of changes can be made to the configuration, design and construction of the invention to achieve those advantages. Hence, reference herein to specific details of the structure and function of the present invention is by way of example only and not by way of limitation.

What is claimed is:

1. A snowmaking automation system for remotely controlling the generation of snow, comprising:

a hydrant for selectively receiving and delivering pressurized water and compressed air;

a snowmaking gun coupled to the hydrant to selectively receive the pressurized water and the compressed air;

at least one automation module coupled to the hydrant or the snowmaking gun, each of the at least one automation modules having a means for communication and a motor for actuating the snowmaking gun or the hydrant to selectively generate snow using the water and the air; and

a base station in communication with the at least one automation module, the base station configured to provide a user control of the at least one automation module and thereby remotely control generation of the snow.

2. The snowmaking automation system according to claim **1**, wherein the at least one automation module comprises a first automation module coupled to the hydrant and a second automation module coupled to the snowmaking gun.

3. The snowmaking automation system according to claim **1**, wherein the means for communication is selected from the group consisting of: wireless radio communication, hardwired network communication, optical fiber communication.

4. The snowmaking automation system according to claim **1**, further comprising at least one repeater node linking wireless communication between the base station and the at least one automation module.

5. The snowmaking automation system according to claim **4**, further comprising a weather station in communication with the repeater node, the weather station configured for sensing and transmitting atmospheric weather conditions.

6. The snowmaking automation system according to claim **1**, further comprising a database in communication with the at least one automation module for storing data gathered from the at least one automation module.

7. The snowmaking automation system according to claim **6**, further comprising a server in communication with the at least one automation module and the database, the server configured for storing and running a computer software program configured for remotely interacting with and controlling the at least one automation module and the database.

8. The snowmaking automation system according to claim **7**, the base station further comprises a computer with a user interface in communication with the server, the database and the at least one automation module, the computer with the user interface configured to remotely interact with and control the at least one automation module.

9. The snowmaking automation system according to claim **1**, wherein the at least one automation module further comprises:

a housing with an actuator interface for attachment to a snowmaking gun or a hydrant;

a gear motor with encoder mounted inside the housing and coupled to the actuator interface, the gear motor configured to selectively drive a snowmaking gun or a hydrant;

a radio modem and antenna mounted inside the housing; and

a battery mounted inside the housing, the battery coupled to, and configured for powering, the gear motor and the radio modem.

10. A snowmaking automation module, comprising:

a housing with an actuator interface for attachment to a snowmaking gun or a hydrant;

a gear motor mounted inside the housing and coupled to the actuator interface, the gear motor configured to selectively drive a snowmaking gun or a hydrant;

a radio modem and antenna mounted inside the housing; and

a battery mounted inside the housing, the battery coupled to, and configured for powering, the gear motor and the radio modem.

11. The snowmaking automation module according to claim **10**, further comprising a control panel mounted to the outside of the housing, the control panel configured for a user to manually control the snowmaking automation module and either a snowmaking gun or a hydrant to which it is attached and to configure the automation module for remote operation.

12. The snowmaking automation module according to claim **10**, further comprising a solar panel mechanically coupled to the housing and electrically coupled to the battery for passively supplementing life of the battery.

13. The snowmaking automation module according to claim **12**, further comprising a flexible pipe for mechanically coupling the solar panel to the housing and electrically coupling the solar panel to the battery, the flexible pipe configured to allow manual aiming of the solar panel to maximize solar power conversion efficiency.

14. The snowmaking automation module according to claim **10**, further comprising a global positioning system (GPS) module mounted in the housing and coupled to the radio modem, the GPS module configured for determining the position of the automation module and providing position information to the radio modem.

15. The snowmaking automation module according to claim **10**, further comprising a handle formed into the housing, the handle configured for a user to remove, transport or mount the snowmaking automation module.

* * * * *